Surface and Ambient Sensing Thermostats
VE and C8 Series

VE Series

Description: VE Surface Temperature Sensors are temperature operated switches ideally suited for applications requiring small, precise but rugged devices. They are designed to sense surface temperature within very narrow differentials with a high degree of reliability.

Operations: VE Surface Temperature Sensors have a unique dual bimetal design which produces larger forces and contact motion than ordinarily found in devices of this size. Intimate coupling between the mounting base and actuating elements produces an exceptionally fast response time. Contact chatter is eliminated and the unit has no resonant points below 2000 Hz.

Advantages
- Miniature size
- Direct Metallic Heat Conduction
- Rapid Response
- High Shock and Vibration Characteristics
- Field Adjustable
- Hermetically Sealed (optional)

Applications
- Semiconductor Heat Sinks
- Crystal and Capacitor Ovens
- Cooling System Control
- Computer Systems
- Motors and Generators
- Alarm Systems

Military Environments

Designed for military environments for exposure to -55°C to +150°C, the VE Series meets the rugged shock and vibration requirements associated with military and high-grade industrial applications. Typical control applications include:

- Heat Sinked Components
- Frequency Stability
- Motors, Generators, Compressors
- Electronic Systems
- Power Supplies
- Truck, Railcar Environmental Applications
- Temperature Sensitive Systems
- Heat Dissipation Systems

Specifications

Setting:	See table (page 15). Unit can be set to any temperature within the specified ranges.	Contact:	Open on rise or close on rise Rating: 3A @ 115 VAC Resistive 1A @ 32 VDC Resistive
Setting Tolerance:	± 5°F (±3°C)		
		Vibration:	10g to 2000Hz. *
		Shock:	10g 11 msec*

*when temperature is at least 3°C from the actual temperature setting

C8 Series

Description: C8 Ambient Temperature Sensors are cartridge-size thermal switches ideally suited to control or monitor temperature in either air or liquid mediums.
Available in different mounting arrangement, they provide a high degree of sensitivity and operate under severe environmental conditions.

Operations: C8 Sensors are based on a differential expansion principle, comparing the expansion or contraction of the outer shell in relation to an internal member that is not affected by temperature. The differential in expansion of these two members is then multiplied by the internal mechanism and transferred as a motion to the contacts. The contacts are built in a separate fused glass header with a minimum current path to reduce self-heating effects.

Advantages
- Fast response Time
- Narrow Temperature Differential
- Hermetically Sealed
- Stable Under Severe Shock and Vibration

Applications
- Heating and Cooling Equipment
- Ventilation Systems
- Fire Detection
- Hydraulic Systems
- Critical Temperature Equipment

Military Environments

Designed for military environments for exposure to -55°C to +150°C, the C8 Series meets the rugged shock and vibration requirements associated with military and high-grade industrial applications. Typical control and alarm applications include:

- Heating and Cooling Equipment
- Ventilation Systems
- Fire Detection
- Hydraulic Systems
- Critical Temperature Equipment

Specifications

Setting Tolerance:	± 5°F (±3°C)	Vibration:	25g to 1000Hz.*
Contact:	S.P.S.T. open on rise or S.P.S.T. close on rise 5A @ 115 VAC Resistive 1A @ 32 VDC Resistive	Shock:	50g 11 msec*
		Material:	C8-C, C8-B, C8-F Brass zinc plated with chromate finish C8-P is nickel plated

*when temperature is at least 3°C from the actual temperature setting

SERIES VE

1) **Factory Set and Hermetically Sealed**–Contact factory. Specify desired temperature setting °F or °C and indicate open on rise or close on rise contact configuration.
2) **Field Adjustable**–Unsealed. Order from table below.

TEMP. RANGE	MODEL NO.	
	Contact Open on Rise	Contact Close on Rise
0°C to +55°C +32°F to +131°F	VE-2101	VE-2102
+50°C to +105°C +122°F to +221°F	VE-3101	VE-3102
+100°C to +150°C +212°F to +300°F	VE-4101	VE-4102
-50°C to +5°C -67°F to +41°F	VE-1101	VE-1102

SERIES C8

Mounting:

Model		Type of Mounting
C8-C	–	No mounting bracket
C8-B	–	Side mounting bracket
C8-F	–	3-hole flange mount
C8-P	–	Pipe fitting

Contact:

O.R.	–	Open on Rise
C.R.	–	Close on Rise

Factory Temperature Setting:
-25°C to +150°C
-30°F to +300°F

Example:

To order a 3-hole flange mounted C8 unit set for 80°F with normally closed contacts–
SPECIFY–C8-F, O.R., 80°F

OUTLINE DIMENSIONS

Detailed outline drawings with tolerances are available on request.

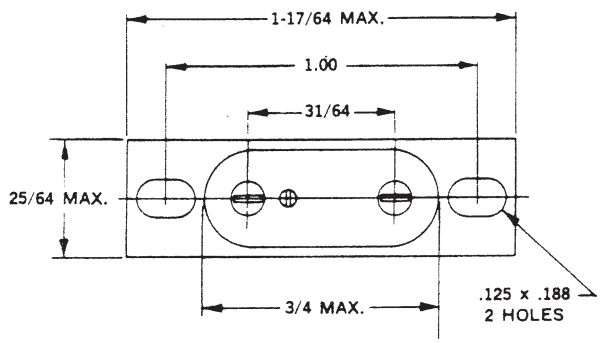

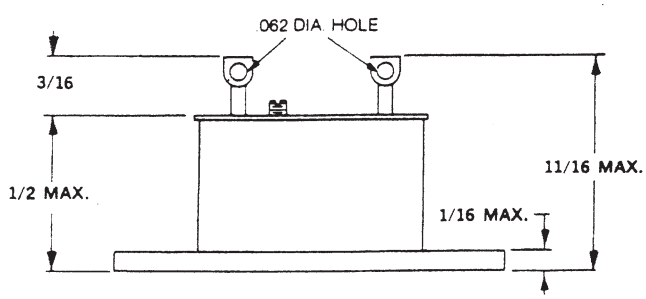

Direct replacement for Fenwal Series 32410/32411–The Fenwal Company discontinued this popular surface sensing series in 1987–The Warren G-V Series VE Thermostat mounts on the same 1.00" centerline as direct replacement, meeting all electrical and thermal requirements of the former unit.

Detailed outline drawings with tolerances are available on request.

TYPE C8-C

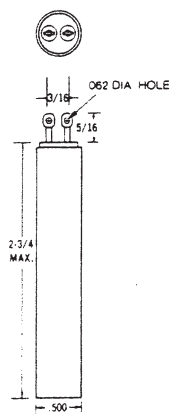

TYPE C8-B

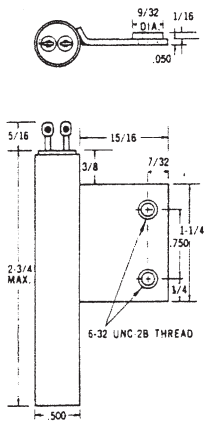

TYPE C8-F

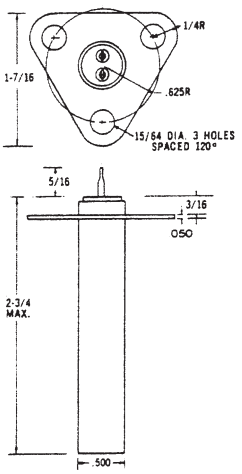

TYPE C8-P

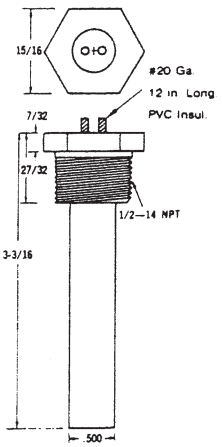

Radiodetection is a proud member of the SPX group of companies, which provide technical products and service solutions worldwide.

Radiodetection and its associated companies specialize in the design and manufacture of products for the location and maintenance of underground pipes and cables. Our aim is to be viewed as the supplier of choice of 'high performance' quality equipment using advanced product technologies. We are also committed to both design innovation and customer support.

Radiodetection equipment users have easy access to technical support. A call to your regional representative, or the Radiodetection head office, will put you in contact with our team of field-experienced technical experts.

Radiodetection has a team of factory-trained service technicians and dedicated service facilities. Turnaround is fast, and costs are very competitive.

Product training for your operators and training personnel is available on your site, or at Radiodetection's headquarters. Training is with qualified instructors and each trainee receives a certificate to confirm they have received the training.

America

Radiodetection
154 Portland Road
Bridgton, ME 04009, USA
Tel: +1 (207) 647 9495
Toll Free: +1 (877) 247 3797
Fax: +1 (207) 647 9496
Email: rd.sales.us@spx.com
Web: www.radiodetection.com

Pearpoint
72055 Corporate Way
Thousand Palms CA 92276, USA
Tel: +1 800 688 8094
Tel: +1 760 343 7350
Fax: +1 760 343 7351
Email: pearpoint.sales.us@spx.com
Web: www.radiodetection.com

Radiodetection (Canada)
344 Edgeley Boulevard, Unit 34
Concord, Ontario L4K 4B7, Canada
Tel: +1 (905) 660 9995
Toll Free: +1 (800) 665 7953
Fax: +1 (905) 660 9579
Email: rd.sales.ca@spx.com
Web: www.radiodetection.com

Europe

Radiodetection Ltd (UK)
Western Drive
Bristol BS14 0AF, UK
Tel: +44 (0) 117 976 7776
Fax: +44 (0) 117 976 7775
Email: rd.sales.uk@spx.com
Web: www.radiodetection.com

Radiodetection (France)
13 Grande Rue, 76220
Neuf Marché, France
Tel: +33 (0) 232 8993 60
Fax: +33 (0) 235 9095 58
Email: rd.sales.fr@spx.com
Web: http://fr.radiodetection.com

Radiodetection (Benelux)
Industriestraat 11
7041 GD 's-Heerenberg, Netherlands
Tel: +31 (0) 314 66 47 00
Fax: +31 (0) 314 66 41 30
Email: rd.sales.nl@spx.com
Web: http://nl.radiodetection.com

Radiodetection (Germany)
Groendahlscher Weg 118
46446 Emmerich am Rhein, Germany
Tel: +49 (0) 28 51 92 37 20
Fax: +49 (0) 28 51 92 37 520
Email: rd.sales.de@spx.com
Web: http://de.radiodetection.com

Asia-Pacific

Radiodetection (Asia-Pacific)
Room 708, CC Wu Building
302-308 Hennessy Road, Wan Chai
Hong Kong SAR, China
Tel: +852 2110 8160
Fax: +852 2110 9681
Email: rd.sales.cn@spx.com
Web: www.radiodetection.com

Radiodetection (China)
Hongfu Mansion, Room 61622
Zheng Ge Zhuang, Bei Qi Jia Town
Chang Ping District
Beijing 102209, China
Tel: +86 (0) 10 8975 5540
Fax: +86 (0) 10 8975 5640
Email: rd.service.cn@spx.com
Web: http://cn.radiodetection.com

Radiodetection (Australia)
Unit 14, 5-7 Prosperity Parade
Warriewood NSW 2102, Australia
Tel: +61 (0) 2 9979 8555
Fax: +61 (0) 2 9979 7733
Email: rd.sales.au@spx.com
Web: www.radiodetection.com

To see the full range of products and services provided by Radiodetection visit:

www.radiodetection.com

Radiodetection products are under continuous development and are subject to change, we reserve the right to alter or amend any published specification without notice.
Copyright 2008 Radiodetection Ltd. - SPX Corporation. All rights reserved. Radiodetection Ltd. is a subsidiary of SPX Corporation.

Radiodetection
AN SPX COMPANY