SCHONSTEDT®
from RADIODETECTION

u-LOCATE™

Pipe and Cable Locator Range

User Guide

90/U-LOCATE-UG-ENG/04

SPX TECHNOLOGIES

Preface

Important notice

Schonstedt believes the statements contained herein to be accurate and reliable; however, their accuracy, reliability, or completeness is not guaranteed.

Schonstedt's only obligation shall be to repair or replace any instrument proven to be defective within one year of purchase. Schonstedt shall not be responsible for any injury to persons or property, direct or consequential, arising from the use of any instrument.

Table of contents

Contents

Introduction **5**
Passive 50/60 Hz 5
Direct connect 5
Inductive clamp 5
Signal induction 6
Sonde (u-LOCATE+ only) 6
Operating recommendations 6
u-LOCATE and transmitter functional test 6

u-LOCATE (+) receiver **8**
Receiver features 8
Automatic and manual gain 8
Directional indication 8
Depth measurement 8
Controls 9
Visual and audible indicators 10
Connectors and accessories 12
Battery replacement 12
Specifications 12
Regulatory compliance and declaration of conformity 13

u-LOCATE transmitter **14**
Transmitter features 14
Battery replacement 14
Replacing batteries 14
Specifications 15
Regulatory compliance and declaration of conformity 15

How to use your locator and transmitter **16**
Scanning an area before digging 16
Direct connection 16
Signal induction 17
Eliminating adjacent cables or pipes (‘nulling out’) 18
Accessories 18
Inductive clamp 18
Sondes- for non-metallic utilities 19
Searching for a Sonde 19
Live plug connector- to trace domestic power wiring circuits 20
FlexiTrace™ – to locate non-metallic utilities 20

Technical support/service information **21**

Warranty **22**

Introduction

In general, pipe and cable locators can operate in a variety of modes and frequencies. The following is a brief description of the basic operating modes supported by the u-LOCATE™ and u-LOCATE+ Pipe & Cable locators and transmitter. In addition, u-LOCATE offers advanced features to suit almost any type of locating challenge, while emphasizing portability, size, and convenience.

All Schonstedt products are manufactured following high standards of reliability, durability and performance.

For additional information on pipe and cable locating theory and techniques, check the training section of our website at **www.schonstedt.com/training/U-LOCATE**.

Passive 50/60 Hz

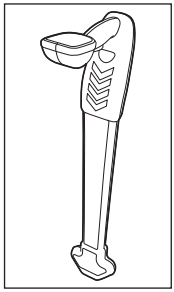

The AC power system line frequency is 60Hz in North America, but may be 50Hz in some locations. The receiver must be programmed for one of these frequencies in order to locate AC power lines in passive mode. The default configuration is 60Hz. It can be changed by pressing the Depth and Frequency buttons simultaneously). In passive mode, the transmitter is not used at all. Instead, the receiver searches for an appropriate harmonic of 60 or 50 Hz signals. These signals are typically present in energized power cables, making it possible to locate them without using a transmitter to impose a tracing signal onto them.

Direct connect

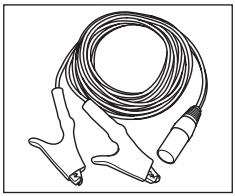

In Direct Connect mode, the transmitter imposes a signal of the selected frequency onto the pipe or cable to be traced. It does so by making direct contact with the pipe or cable at a point where the pipe/cable comes up to the surface of the ground (a transformer box, a water hydrant, a telephone switch box, a gas meter, etc.). The circuit is closed by providing a return path with a stake that is buried in the ground near the transmitter.

Inductive clamp

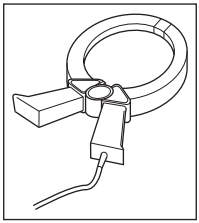

In inductive clamp mode, the transmitter imposes a signal of the selected frequency onto the pipe or cable to be traced. It does so by energizing a clamp that is placed so that it is completely encircling the pipe or cable at a point where the pipe/cable comes up to the surface of the ground (a transformer box, telephone switch box, gas meter, etc.). The clamp then induces a current onto the pipe or cable. In this mode, it is not necessary to provide a return path for the induced current to the transmitter. The induced current will travel on the pipe or cable for a certain distance, making it possible to trace it.

Signal induction

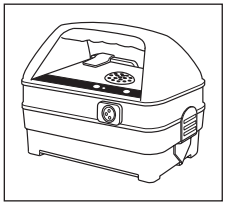

In the signal induction mode, the transmitter imposes a signal onto the pipe or cable to be traced. It does so by energizing an inductive antenna built into the case. The transmitter is placed on the ground in a direction perpendicular to the pipe or cable being traced. The inductive antenna then induces a current onto the pipe or cable. In this mode, it is not necessary to provide a return path for the induced current to the transmitter. The induced current will travel on the pipe or cable for a certain distance, making it possible to trace it.

Sonde (u-LOCATE+ only)

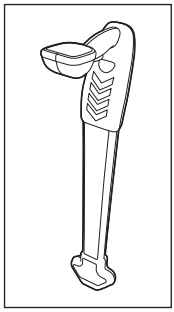

In sonde mode, the transmitter is not used at all. This mode is used to trace non-metallic pipes, or metallic pipes where other modes are inapplicable or inefficient. A small beacon transmitter, or sonde, is pushed through the pipe, and the receiver searches for the signal emitted by the sonde.

Since the signal being traced by the receiver is produced by the sonde and not travelling along the pipes, there are some differences in the way the receiver is used. Due to the nature and strength of the sonde signal, it is necessary to have some idea of where the sonde is (in order to narrow the search area to a radius of several feet centered on the sonde).

For additional information on sonde locating and techniques, check the training section of our website at **www.schonstedt.com/training**.

Operating recommendations

When using u-LOCATE, follow these tips and recommendations to improve and facilitate your locating experience:

u-LOCATE and transmitter functional test

Schonstedt recommends that you perform a daily functional test on your u-LOCATE /u-LOCATE+ Locator (“Locator”) and Transmitter before use.

- Place the Transmitter on the ground, switch on and check for an audible sound. If no sound is heard or the low battery warning light is flashing, replace the batteries before use.
- Switch on the Locator by squeezing the trigger, checking for an initial ‘chirp.’ A low tone indicates low batteries. If no sound is heard, replace the batteries before use.
- Set the Locator to ACTIVE mode at maximum sensitivity, hold at waist height pointing toward the Transmitter and check that the Locator can detect the Transmitter up to 50 Feet (15m) away with a clearly audible sound.

1. Whenever possible, use the Direct Connect mode. It provides the strongest and best coupled signal.
2. When operating in Direct Connect mode:
   – Try to bury the ground stake on a line perpendicular to the utility to be traced.
   – Verify that a good circuit has been established by listening for a tone change when you connect the Clips to the utility.
3. When operating in the inductive mode, place the transmitter on its side over the buried cable or pipe in the direction indicated by the label (perpendicular to the suspected direction of the pipe or cable).
4. If using the inductive clamp mode, place the clamp so that it completely encircles the desired cable or pipe. Make sure the clamp can fully close so that both ends touch.
5. When operating in the passive mode, be aware of your surroundings and possible interference from overhead power lines, other buried cables, pipes or utilities carrying 50 or 60 Hz signals, and nearby transformers or substations.
6. In all operating modes, always set the gain initially at the maximum setting and then reduce the gain to obtain a signal strength reading between 200 and 800 that shows a clear peak over the target. A consistent reading of 995 or higher indicates the signal is too strong and the receiver gain and/or transmitter power should be reduced.

u-LOCATE (+) receiver

Receiver features

1. Keypad.
2. LCD.
3. Speaker.
4. Battery compartment.
5. Highly reflective CLASS 2 safety labels.
6. Headphone connector.

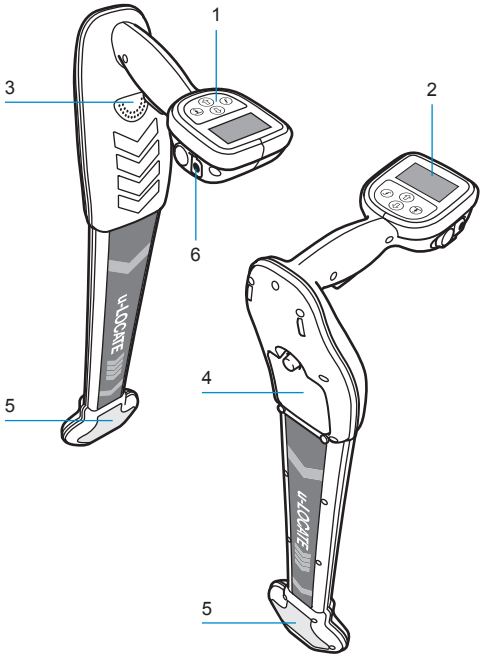

Automatic and manual gain

The u-LOCATE receiver has the ability to operate in an automatic or manual gain mode. In the automatic gain mode, the sensitivity of the receiver is adjusted automatically, based on the strength of the detected signal, to produce a relatively constant and strong signal strength indication. In the manual gain mode, the user can adjust the sensitivity up or down to suit different locating scenarios.

Directional indication

The u-LOCATE receiver is equipped with directional indicators (arrows). These visual indicators help the user locate the pipe or cable by showing which direction he/she should move in order to get closer to the target. These indicators are not available in the Sonde mode.

Depth measurement

The u-LOCATE receiver has the ability to measure the approximate depth of the target pipe or cable being traced. When a depth measurement is made, the bottom tip of the receiver must be touching the ground. Depth measurements should only be made when the directional indication shows both arrows. Special considerations are required for the Sonde mode.

To measure depth, simply place the tip of the unit on the ground and press the button when the signal strength is at a peak. The achievable depth depends on a number of factors, but typically it is possible to read depth up to 5 to 15 feet (1.5 to 4.2 m).

Controls

The u-LOCATE Receiver controls are designed to be intuitive and require a minimum of training for effective use. The receiver can easily be operated with one hand.

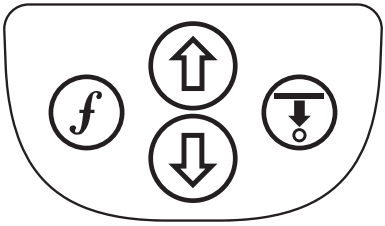

ON/OFF - The trigger switch is located under the display head. Press to power on and release for power off.

KEY	DESCRIPTION
	Cycles through the locate modes as follows **u-LOCATE Passive Active 82kHz** **u-LOCATE+ Passive Active 82kHz Active 33kHz Sonde 512Hz** **The locator will switch back on to its last selected mode if powered down.**
and	**When the receiver is operating in manual gain mode, pressing the UP or DOWN arrows will increase or decrease the gain from its current setting. When the receiver is operating in the automatic gain mode, the first press of the UP or DOWN arrow will switch the receiver to the manual gain mode.**
	AUTO – When the receiver is operating in the manual gain mode, pressing the UP and DOWN arrows simultaneously will switch the receiver to operate in the Automatic gain mode. In this mode the receiver adjusts its sensitivity as a function of the strength of the detected signal. **DEPTH – When the proper conditions to measure depth are present, pressing this switch briefly will display the target's depth on the LCD (after a delay of 2 seconds). The depth will continue to be displayed on the LCD, along with the "depth symbol", for as long as the switch is depressed. If the switch is pressed and quickly released, the depth will show on the LCD momentarily. The user may select the unit of measurement used for depth. Depth may be displayed in Imperial/English units (feet and inches, by default) or metric units (meters, with two decimal digits of accuracy). The default configuration is Imperial / English units. It is configurable by the user by pressing the Up arrow and Frequency buttons simultaneously. If the depth cannot be determined due to a weak signal or interference signal by other nearby utilities (congested underground) the LCD will show 3 dashes "---".**

Visual and audible indicators

The information display areas for the receiver are easy to understand. In addition, the receiver has visual indicators to facilitate operation in heavy traffic or noisy areas. All visual indicators for the receiver are on the LCD display, which has six general areas to display information to the user: a Battery Indicator, a Gain Indicator, a Frequency/ Mode Indicator, a Direction Indicator, an Alphanumeric Display and a Volume Indicator.

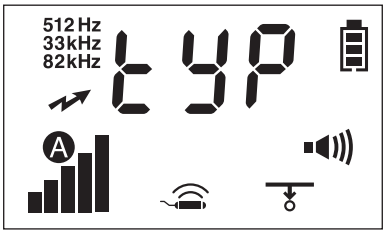

KEY	DESCRIPTION
	BATTERY INDICATOR – The battery symbol indicates the receiver's battery status. When all 3 segments inside the battery symbol are present, the battery is fully charged. When only the 2 bottom segments are present, the battery has a medium charge. When only the bottom segment is present, the battery has a low charge and should be replaced. If there are no segments present, the battery is extremely low and you should replace it immediately.
	GAIN INDICATOR – The "Ⓐ" indicates that the gain is in the automatic mode. In this mode, the receiver adjusts its sensitivity as a function of the strength of the detected signal. No bar graph is shown in this mode. **If the "Ⓐ" is not visible, the receiver is operating in the manual gain mode; therefore, a means to show the user the relative gain setting is necessary. The bar graph indicates the relative strength of the gain.** **Each time the UP or the DOWN arrow is pressed, the gain is adjusted by 1/30th of the full scale range and the gain level, preceded with an "L", is shown temporarily to the user on the main signal display. The bar graph will change with approximately 6 presses of the UP or DOWN arrow. The user may press and hold the UP or DOWN button to change the gain rapidly.**
512 Hz 33 kHz 82 kHz	**FREQUENCY/MODE INDICATOR – There are different icons displayed depending on the model. u-LOCATE+ has 5 icons "512 HZ", "33 kHz", "82 kHz", and "Passive Arrow" are on the upper left, and "SONDE" in the lower center. u-LOCATE has 3 icons "512 Hz", "33 kHz" and "Passive Arrow" located in the upper left.** **These icons are used by themselves, or in various combinations to indicate different operating modes, as shown in the following table, where (C) is Direct Connect mode, (IC) is inductive clamp mode, and (I) is inductive mode. See CHAPTER I: u-LOCATE OPERATING MODES for a description of these modes.** **u-LOCATE**

OPERATING MODE	SONDE	82 kHz	PASSIVE ARROW
C, IC, I at 82 kHz	Off	On	Off
Passive 50/60 (**)	Off	Off	On

(**) The number 50 or 60 shows briefly on the numeric display upon entering this mode, indicating which line frequency the unit is programmed to locate in passive mode.

KEY	DESCRIPTION

u-LOCATE+

OPERATING MODE	SONDE	33 kHz	82 kHz	512 Hz	PASSIVE ARROW
C at 33 kHz	Off	On	Off	Off	Off
C, IC, I at 82 kHz	Off	Off	On	Off	Off
Sonde (*)	On	Off	Off	On	Off
Passive 50/60 (**)	Off	Off	Off	Off	On

***The default sonde frequency is 512Hz.**

(**) The number 50 or 60 shows briefly on the numeric display upon entering this mode, indicating which line frequency the unit is programmed to locate in passive mode.

DIRECTION INDICATOR – The arrows in this indicator tell the operator in which direction to move the receiver in order to be directly over the target. The direction indicator does NOT work in the Sonde operating mode.

- **Right Arrow - Receiver should be moved to the right to get closer to the target.**
- **Left Arrow - Receiver should be moved to the left to get closer to the target.**
- **Both Arrows - Receiver is placed close to or directly over the target. This is also accompanied by a beeping sound.**

When both elements of this indicator are OFF, the signal strength is not adequate to make a directional determination or you are not close to the pipe or cable being traced. Keep searching based on the signal strength indication and the audio feedback, until one of the arrows comes ON.

ALPHANUMERIC DISPLAY – The alphanumeric display is used to display signal strength and depth. The numeric display is also used for temporary indications of certain operating modes, frequencies, and other brief information messages, as noted throughout this manual.

- **Signal Strength – This is an indication of the relative signal level detected by the receiver and is a function of the gain setting. Good signal strength will typically be between 200 and 800.**

  The display range for signal strength is 0 to 999; however, very high signal strength is not necessarily better. If readings of 995 or higher are consistent, the signal is too strong and steps should be taken to reduce it. If a reading of "OL" is observed, a signal is present which interferes with the signal the receiver is set to detect. Steps should be taken to identify the source of interference or to change the locating mode.

- **Depth Reading – When measuring depth, the "depth" icon lights up in the lower right of the display, and the depth of the target is displayed (in feet and inches, or meters - depending on the factory setting). The display range for depth in feet and inches is 0" to 19' 9" and in meters is 0.00 m to 5.99 m.**

VOLUME INDICATOR - The volume indicator consists of a speaker symbol with 3 sound wave bars. If the volume is off, the speaker symbol with NO bars is shown, for medium volume the speaker symbol with 2 bars is shown and for maximum volume the speaker symbol with 3 bars is shown.

The speaker produces an audible indication of signal strength. The pitch of the sound will increase with increasing signal strength. However, the volume is determined only by the VOLUME control, as explained above.

The speaker volume is adjusted by pressing and holding the (f) button. This is a long press.

Connectors and accessories

The receiver has a standard 3.5mm headphone jack that accepts any mono or stereo earphones or headphones. Schonstedt also supplies headphones as an optional accessory. The receiver automatically detects the insertion of the headphones or earphones and routes the audio signals to them, silencing the internal speaker.

The receiver comes fitted with a spring loaded plastic cap to protect the headphone socket from water and dust ingress when not in use.

The u-LOCATE+ receiver is shipped factory ready to detect sondes or other devices, such as inspection cameras, that transmit at 512 Hz; however, the sondes themselves are optional accessories also available through Schonstedt.

Battery replacement

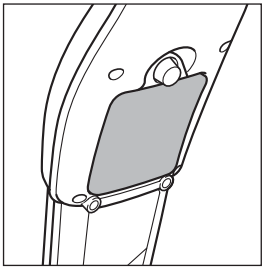

The u-LOCATE receiver is powered by 6 x AA alkaline cells in a cassette. The battery compartment is located on the underside of the locator and is opened by turning the screw counterclockwise. To remove the battery cassette, simply tilt the unit so that the handle is pointing down, and the battery will slide out. When replacing the battery cassette, look at the outside of the battery door for the proper battery orientation. As a safety measure the unit will not turn on if the battery is not inserted correctly. You should never have to force the battery door closed. If the battery cassette does not seem to be going in all the way, remove it, reverse its orientation and then replace it.

Specifications

	u-LOCATE	u-LOCATE+
Operating frequencies	82kHz	33kHz, 82kHz
Sonde	-	512Hz
Passive mode	50/60Hz	50/60Hz
Max Depth Active mode	19’ (5.8m)	19’ (5.8m)
Max Depth Sonde mode	-	5’ to 15’ (1.5m to 4.5m)
Positional Accuracy	5%	5%
Battery requirements	6 x AA Receiver	
Usage hours	20 hours	
Audio output	10-1500Hz (determined by signal strength) 0-70 dB SPL (volume controlled)	
Ingress Protection rating	Weatherproof to NEMA3S and IP65	
Construction	High Impact ABS Plastic	
Operating temperature	-10 to + 50°C (14 to 122°F)	
Weight including Batteries	2.4 lbs (1.1 Kg)	
Warranty	1 year (with an option to extend to 3 years)	
Overall Dimensions:	25.6” x 3.9” x 8.7” (65.1cm x 9.9cm x 22.1cm)	

Regulatory compliance and declaration of conformity

FCC:

This device complies with Part 15 of the FCC Rules. Operation is subject to the following two conditions: (1) this device may not cause harmful interference, and (2) this device must accept any interference received, including interference that may cause undesired operation.

Industry Canada:

CAN ICES-3 (B)/NMB-3(B)

This device should only be cleaned using a dry cloth. Do not use any solvents that could damage the labels.

WARNING: This product contains chemicals known to the State of California to cause cancer and birth defects or other reproductive harm.

Schonstedt Declaration of Conformity is available upon request. Please email request to: **schonstedt.info@spx.com**.

u-LOCATE transmitter

Transmitter features

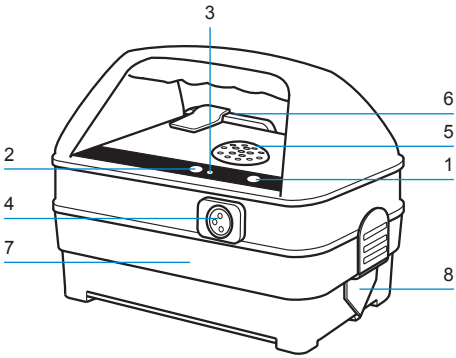

1. On/Off button.
   Press to switch On and Off. Hold down when switching on to reduce volume.
2. Signal Boost Button.
   Press to boost locate signal strength; press again to return to standard power. Transmitter starts-up in standard signal strength mode.
3. Signal Boost LED.
   LED lit when high signal strength power level selected. Flashing LED indicates low battery level.
4. Accessory socket.
   For connection of Direct Connect Leads , Clamp, Live plug Connector and /or Flexitrace.
5. Loudspeaker.
6. Battery compartment.
7. Accessory storage compartment. To store Direct Connect Leads, extension cable, magnet and Ground Stake
8. Highly reflective CLASS 2 safety labels.

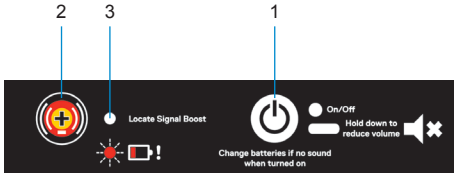

Battery replacement

To replace the batteries, turn the transmitter off, open the access cover using a screwdriver or coin. Use four LR20 (D-cell) alkaline or NIMH rechargeable batteries.

Replacing batteries

Do not mix new and old batteries or different types of batteries, as this may cause them to overheat.

Specifications

Operating Frequencies:	33 kHz and 82 kHz
Operating Modes:	Direct Connect, Inductive frequencies – Direct Connect 33 kHz and 82 kHz – Inductive, 82 kHz only – Accessory Connection, 33 kHz and 82 kHz
Max. Output Power: (Direct Connect mode, @ 1000 Ω load)	1W (boost)
Max. Output Voltage:	23v RMS into Open Circuit
Max.Output Current:	66mA into Short Circuit
Battery Type:	4 x D (LR20) cell or equivalent
Battery Life:	DC mode 15/40 hours (Boost v standard) Induction mode 9/28 hours (Boost v standard)
Accessory connection	a) 3 Pin XLR Jack Output: – Inductive clamp – Direct Connect Leads
Dimensions:	10.8” (17cm) x 6.7” (27.5cm) x 7.8” (20cm)
Weight:	5.95 lbs. (2.75 kg)
Operating Temp.:	-4°F to 122°F (-10°C to 50°C)
Water and Dust Resistance	Rated IP54

Regulatory compliance and declaration of conformity

FCC:

This device complies with Part 15 of the FCC Rules. Operation is subject to the following two conditions: (1) this device may not cause harmful interference, and (2) this device must accept any interference received, including interference that may cause undesired operation.

Industry Canada:

CAN ICES-3 (B)/NMB-3(B)

This device should only be cleaned using a dry cloth. Do not use any solvents that could damage the labels.

If this device is not used in the manner specified in this manual by Schonstedt, the protection provided by the equipment may be impaired.

Schonstedt’s Declaration of Conformity can be found at: **www.schonstedt.com/U-LOCATE**.

How to use your locator and transmitter

Scanning an area before digging

An initial sweep using Passive Mode is recommended, followed by detailed scans using the other modes. Use the Active mode for Depth estimation once a pipe or cable has been detected. Turn the sensitivity control to maximum before starting. If the signal bar graph does not move from maximum, reduce the sensitivity control so that the bar graph is below half-way before starting. Sweep the area to be excavated with a steady and deliberate motion. Begin by walking the perimeter of the proposed excavation site. Then walk the length of the of the excavation site, moving across the width in parallel sweeps around 18" (0.5 m) apart. If using a Transmitter in induction mode, position the Transmitter as shown so that the chevrons on the u-LOCATE are in line with the chevrons of the Transmitter. Then sweep across the width of the excavation site, moving up the length. If a cable or pipe is located, first establish the direction of the cable or pipe, then trace it across the area to be excavated, marking if required. Then resume sweeping over the excavation site.

Direct connection

⚠ WARNING: Connection to a power cable sheath should only be undertaken by qualified personnel.

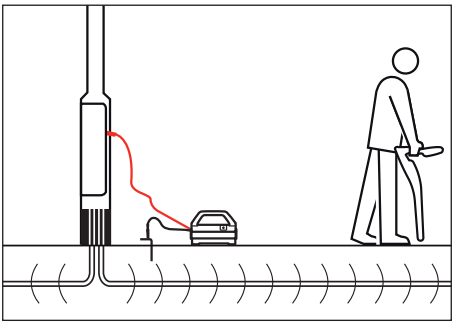

Direct Connection is an effective way to apply the Transmitter locate signal to a specific cable or pipe network so that it can be traced from above ground. Connections can be made to any metallic part of the pipe or cable such as valves, meters, junction boxes, street lights, pipeline markers or other access points.

With the Transmitter switched off, plug the Direct Connect lead into the accessory socket. Attach the red lead to the pipe or cable (if necessary, clean the connection point to ensure a good electrical contact). If the jaws of the clip do not open far enough, and if the connection point is a suitable material, use the supplied magnet.

Connect the black lead to the earth stake which should be secured in the ground 3 – 4 m away from, and at right angles to the target line. Alternatively the black lead may be clipped to a valve box, manhole cover or another earthed point. Use the earth spool lead to extend the earth connection if necessary.

Switch the Transmitter on. A good connection is indicated by a drop in loudspeaker tone. If there is no tone, or if the power boost LED flashes, replace the batteries.

Use the u-LOCATE LOCATOR to scan the area for the target pipes or cables (see ‘Locating with u-LOCATE LOCATOR’).

Signal induction

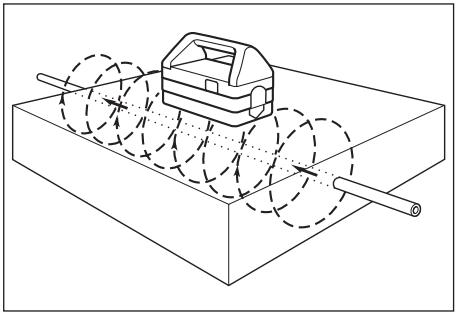

Induction is a convenient and quick way of applying the Transmitter locate signal to a pipe or cable where limited access does not permit the use of Direct Connection or Signal Clamping.

Place the Transmitter over the assumed position of the conductor and in-line with its assumed direction. Move at least 33`(10 m) away and use the u-LOCATE LOCATOR to scan for pipes and cables (see ‘Locating with u-LOCATE LOCATOR’).

Working too close to the Transmitter may give false readings as the u-LOCATE LOCATOR will detect airborne signals directly from the Transmitter rather than the target line. For best results, repeat the scan with the Transmitter facing at 90˚ to the first scan position.

Active search using induction – (*finding parallel pipes and cables*)

Placing the Transmitter on its side swamps an area with Transmitter signal. Note that signal is not transmitted directly below the Transmitter in this orientation, so repeat the exercise with the Transmitter moved to the side by at least 3' 3" (1 m). Alternatively, use a two man technique to search an area for buried utilities as shown.

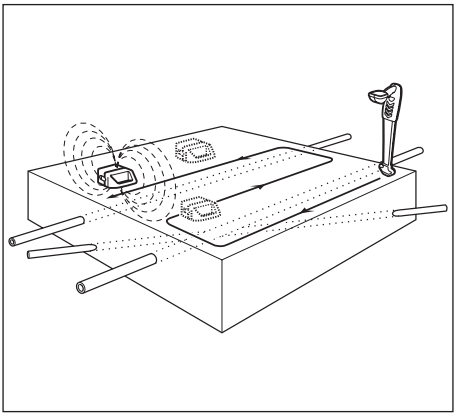

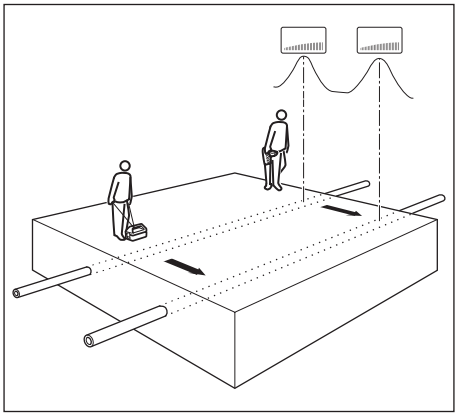

Eliminating adjacent cables or pipes (‘*nulling out*’)

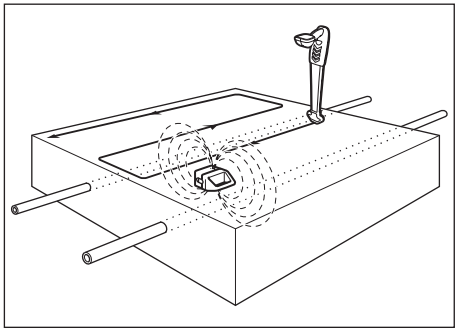

In some applications a cable or pipe carrying a signal can mask adjacent utilities. For example, a large locate signal could be flowing along a large cable that is running close to a second cable with a smaller signal. In this situation u-LOCATE can be expected to locate the signal from the larger cable but may not locate the second cable. To locate the second cable carry out the following:

1. Using the Transmitter in induction mode, place the Transmitter on its side directly over the large cable, and in-line with its direction as illustrated.
2. The cable beneath the Transmitter should now have no locate signal transmitted to it, but other cables in the vicinity should have the u-LOCATE Tx signal transmitted to them and may now be located with the u-LOCATE.

CAUTION: Do not connect Direct Connect clips to live power lines. This is a Hazardous practice and can permanently damage the transmitter. If you are connecting to dead power lines, make provisions to avoid accidental activation of power to the lines. Hazardous live voltage may be present at output terminals in Direct Connect mode.

Accessories

The standard accessories provided in a u-LOCATE receiver and transmitter kit are Direct Connect leads and a Ground stake, all contained in a soft carry bag.

Many optional accessories are also available. The following list includes the most common ones. Please contact Schonstedt or your local dealer for details.

- Inductive clamp (2", 4", 5" and 8.5")
- Sondes (512 Hz)
- Live Plug Connector
- Flexitrace

Inductive clamp

A variety of optional Inductive Clamps can be used to apply the transmitter locate signal safely to pipes and cables with different diameters, without interrupting the supply. Signal clamps are not suitable for connecting around lamp posts.

Plug the Clamp into the Transmitter accessory socket. Place the Clamp around the pipe or cable ensuring the jaws are completely closed.

Switch the Transmitter on then open and close the Clamp. If the jaws are closing correctly there will be a change in tone as the jaws are closed.

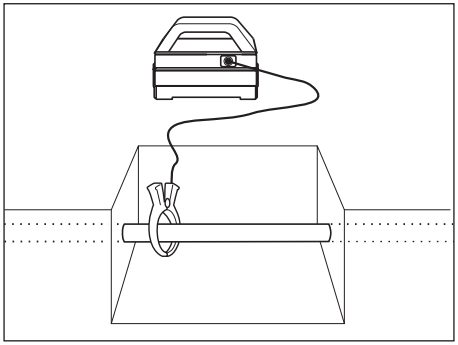

An earth connection from the Transmitter is not necessary but optimal signal transfer is only generally achieved if the target line is grounded at both ends. This is usually the case with power cables.

Use the u-LOCATE LOCATOR to scan the area for the target pipes or cables (see ‘Locating with u-LOCATE LOCATOR’).

Sondes- for non-metallic utilities

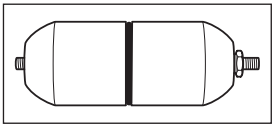

Sonde Signal Transmitter –The Sonde is a small self-contained watertight signal transmitter which can be located by the u-LOCATE+. Unscrew the Sonde housing and insert batteries in the orientation shown by the diagram in the battery compartment. To check for correct operation, place the Sonde on the ground, set the u-LOCATE+ to Sonde Mode and, whilst holding it in line with the Sonde, check that the signal is being received. Insert the Sonde into the duct or drain and adjust the u-LOCATE+ sensitivity to receive the signal.

Smaller ghost signals appear before and behind the main signal position. Locate all three peaks to be sure the largest middle one is identified as the Sonde position. Rotating the u-LOCATE+ about its axis to obtain the largest signal puts the u-LOCATE+ in line with the Sonde and is a good way of identifying the direction of the duct or pipe. Estimating Sonde depth using the u-LOCATE+ Do not use the U-LOCATE+ depth estimation to decide if mechanical digging is appropriate.

Searching for a Sonde

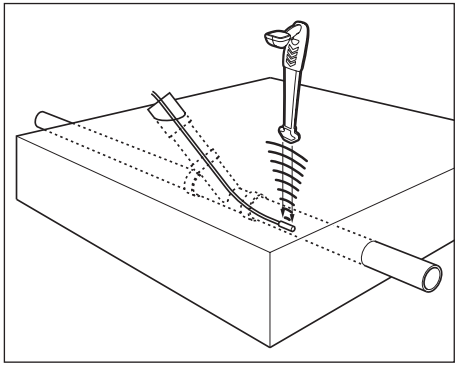

Once in the surroundings of a sonde, it is important to differentiate whether you are positioned along the axis of the sonde (the direction of the pipe) or off to either side. In the sonde mode, the directional indication is not functional; the signal strength is the only indication available.

Rotate the receiver back and forth and move in the direction that produces the maximum (peak) signal strength. As the receiver gets closer to the sonde,

the signal strength increases and it will hit a peak when the receiver is directly over the sonde. Slowly rotate the receiver to fine tune the peak signal strength, which will occur when the plane of the sensors is parallel to the axis of the sonde. For verification, rotate the receiver 90 degrees and see that it produces a “null" (signal strength very close to zero), and then counter-rotate 90 degrees to go back to the original position.

Live plug connector- to trace domestic power wiring circuits

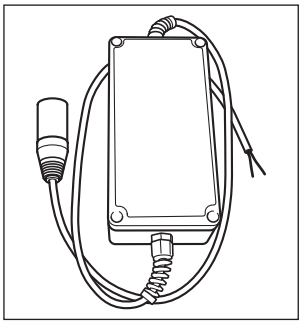

Do not use the supplied Direct Connect leads to connect to live cables, use the Live Plug Connector. Failure to do so may result in injury or equipment damage. Connection to live power cables should only be undertaken by qualified personnel. The Live Plug Connector applies the Transmitter signal to a live domestic power socket and, via the domestic wiring system, to the utility and supply cable in the street. Connect the Live Cable Connector to the Transmitter accessory socket and the mains power socket, then switch the Transmitter and the power socket on.

NOTE: The Live Plug Connector provides protection to 250V AC.

FlexiTrace – to locate non-metallic utilities

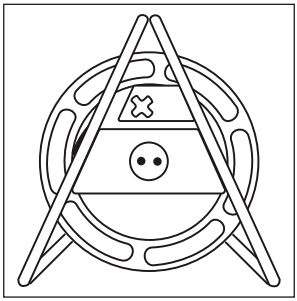

FlexiTrace is a 164' (50 m) or 260' (80 m) flexible conductive rod with a built-in Sonde that can be inserted into non-metallic pipes and ducts to allow them to be located at depths of up to 10' (3 m). FlexiTrace can be inserted into a pipe or duct as small as ½" (12 mm) internal diameter, and with bends as tight as 10" (250 mm). To use as a Sonde, connect both transmitter leads to the FlexiTrace lugs. In this mode, only the tip of the FlexiTrace will be locatable. To trace the whole length, connect the red transmitter lead to a FlexiTrace terminal and ground the black lead, either to the earth stake or to an appropriate earthing point.

Technical support/service information

Schonstedt offers technical support and sales support. For any reason regarding usage and application, please contact our technical support team at 888-32-TRACE (888-328-7223).

For service or repair

please ship unit to:

Schonstedt Instrument Company
100 Edmond Road
Kearneysville, WV 25430
Attn: Customer Service Dept.

Return instructions and return form are located online at: **https://www.schonstedt.com/support/repair-department/**.

Warranty

Schonstedt Instrument Company (Schonstedt) warrants each product of its manufacture to be free from defects in material and workmanship subject to the following terms and conditions. The warranty is effective for 1 year after the shipment by Schonstedt to the original purchaser. Please complete the warranty registration card online at **www.schonstedt.com/welcome**.

Schonstedt's obligation under the warranty is limited to servicing or adjusting any product returned to the factory for this purpose and to replacing any defective part thereof. Such product must be returned by the original purchaser, transportation charges prepaid, with a description of the defect in writing. If the fault has been caused by misuse or abnormal conditions of operation, repairs will be billed. Specifically, this warranty does not cover product that has been subject to inundation by fire, water or other liquid intrusion, or units that have been damaged or compromised due to repair, alteration or modification by anyone other than an authorized repair representative. Prior to a repair being performed by Schonstedt, a cost estimate will be submitted and no work will be completed until authorized by the customer. Batteries are specifically excluded under the warranty and should be addressed to the manufacturer of batteries in question.

Schonstedt shall not be liable for any injury to persons or property or for any other special or consequential damages sustained or expenses incurred by reason of the use of any Schonstedt product.

SCHONSTEDT®
from RADIODETECTION

SPX TECHNOLOGIES

Our Mission

Provide best in class equipment and solutions, to prevent damage to critical infrastructure, manage assets and protect lives.

Our Vision

To be the world's leader in the management of critical infrastructure and utilities.

Our Locations

USA
Raymond, ME
Kearneysville, WV

Canada
Mississauga, ON

Europe
United Kingdom **HQ**
France
Germany
The Netherlands

Asia Pacific
India
China
Hong Kong
Australia

schonstedt.com

Radiodetection, LLC - Schonstedt
100 Edmond Road, Kearneysville, WV 25430 USA
Toll Free: +1 888 367 7014 Tel: +1 304 724 4722
schonstedt.info@spx.com

Scan to see a full list of our office locations

Copyright © 2026 Radiodetection Ltd. All rights reserved. Radiodetection is a subsidiary of SPX Technologies, Inc. Schonstedt, u-LOCATE and FlexiTrace are either trademarks or registered trademarks of Radiodetection in the United States and / or other countries. Due to a policy of continued development, we reserve the right to alter or amend any published specification without notice. This document may not be copied, reproduced, transmitted, modified or used, in whole or in part, without the prior written consent of Radiodetection Ltd.

90/U-LOCATE-UG-ENG/04